Model No. DCL180 CORDLESS CLEANER

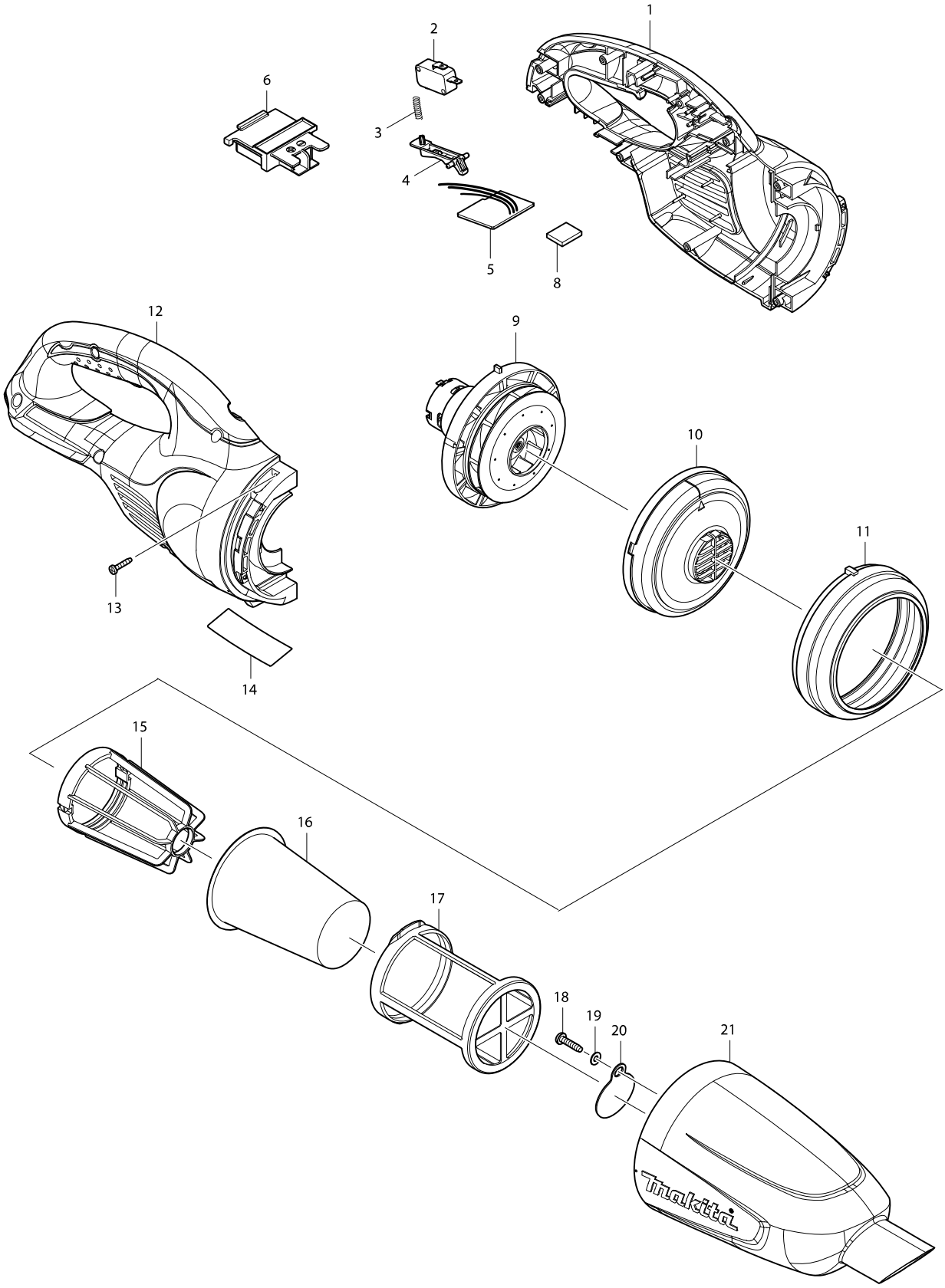

Model No. DCL180 CORDLESS CLEANER

Item	Parts No.	Description	I/C	QTY	N/O	Opt. 1	Opt. 2	NOTE
001	187460-4	HOUSING SET		1				
C10	424209-4	SPONGE SHEET 50-50		2				
D10		INC. 12						
002	651891-8	SWITCH V-15-3A6		1		85366990		
003	231473-8	COMPRESSION SPRING 4		1		73209090		
004	451227-9	SWITCH LEVER		1				
005	638936-9	CONTROLLER UNIT		1				
006	643860-3	TERMINAL		1		73182990		
008	424248-4	SPONGE SHEET 15-25		1		40169390		
009	125867-6	MOTOR ASS'Y		1		85011019		
C10	452455-9	BASE		1		73182990		
C20	265199-0	+ PAN HEAD SCREW M3X8		2		73181500		
C30	240102-2	FAN 82		1		84145190		
010	416030-5	FAN COVER		1		84679900		
011	424320-2	RUBBER RING		1		40169390		
012	187460-4	HOUSING SET		1				
C10	424209-4	SPONGE SHEET 50-50		2				
D10		INC. 1						
013	266429-2	TAPPING SCREW 3X16		7		73181500		
014	815F73-4	DCL180 NAME PLATE		1				
015	410237-5	STAY		1	*			
015-1	458467-0	STAY	<	1				
016	443060-3	FILTER		1				
017	451208-3	PRE-FILTER		1				
018	265995-6	TAPPING SCREW 4X18		1		73181500		
019	941051-3	FLAT WASHER 4		1		73182200		
020	424208-6	VALVE		1				
021	451226-1	CAPSULE		1				
022	424308-2	SPONGE SHEET 50-36		1				
023	632H18-7	FUSE UNIT		1				
024	422268-2	SPONGE SHEET 57		1				
A01-1	123486-2	FLOOR T-NOZZLE 28 WHI		1		84679900		
C10	451410-8	ROLLER		4		84679900		
C20	268208-4	PIN 3		4		73182990		
C30	424096-1	WIPER		1		84679900		
A02	451240-7	SASH NOZZLE 28 WHI		1		84679900		
A03	451241-5	PIPE		1		73269099		
A04	451242-3	SASH NOZZLE HOLDER		1				
A05	***DC18RC	DC18RC FAST CHARGER		1				
A06-1	197605-6	BATTERY BL1830B SET		1		85076000		

Please order the parts with a part number.

Print Date 26/11/2019